RoHS Compliant | Customer Drawing

REV.	ECN NO.	DESCRIPTION	DATE	DESIGN

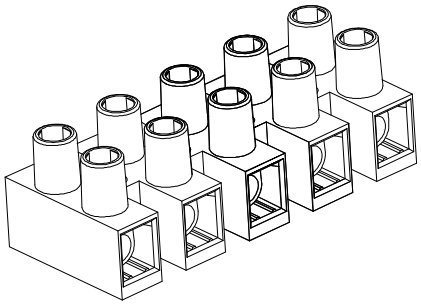

SPECIFICATION

MATERIAL

- Housing:PA66,UL94V-0
- Screw:M3.0 Steel ,Zinc Plated
- Terminal:Brass,Ni Plated

ELECTRICAL

- Rated voltage:300V
- Rated current: 30A
- Wire Range(MM^2):1.5-6.0MM^2

MECHANICAL

- Strip Length:10mm
- Operating Temperature:-40°C~+105°C

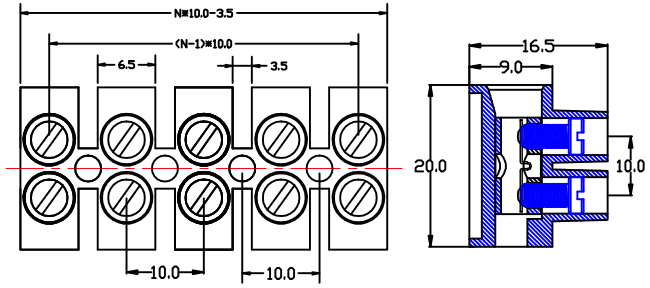

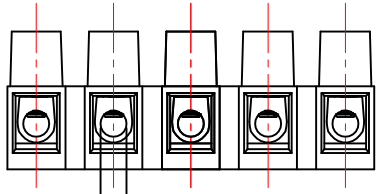

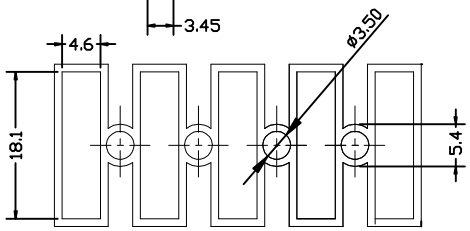

N=No.of contacts

订购方式/HOW TO ORDER

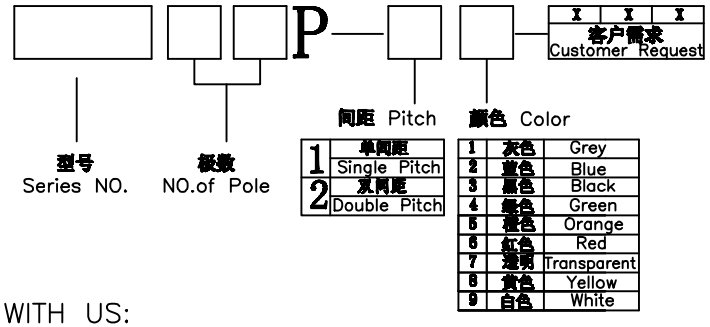

CONTACT WITH US:
TEL:+86-574-63505128 FAX:+86-574-63532183
E-Mail:sales@nbmax.com.cn Website:www.nbmax.com.cn

公差一览表 TOLERANCE UNLESS OTHERWISE			
X.	±0.25	X°.	±5°
.X	±0.20	.X°	±2°
.XX	±0.15	.XX°	±1°
.XXX	±0.02	.XXX°	±0.5°
日期 DATE	2012.07.10		

宁波迈科思电子科技有限公司
NINGBO MKX ELECTRONIC TECHNOLOGY CO.,LTD

单位 UNITS	mm	制图 DRAWING	陈冬梅	产品名称 TITLE	MX10HWP-10.0
角法 VIEW		设计 DESIGN	顾兴伟		
比例 SCALE	1:1	审核 CHKD		产品料号 PART NO.	MX10HWP-10.0
版本 VER	A0	核准 APPD		图号 DRAW NO.	MX10HWP-10.0-A0