RoHS Compliant | Customer Drawing

| REV. | ECN NO. | DESCRIPTION | DATE | DESIGN |
|---|---|---|---|---|
| | | | | |

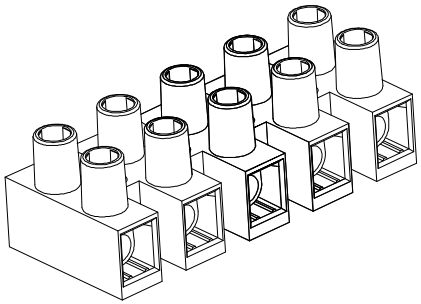

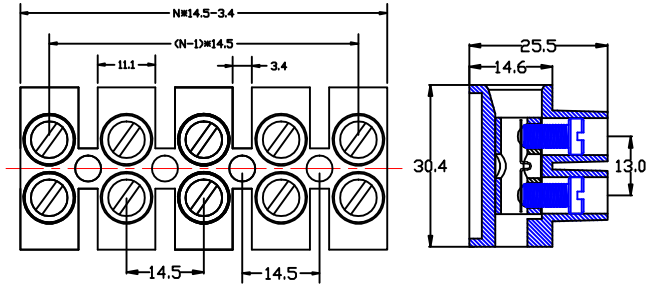


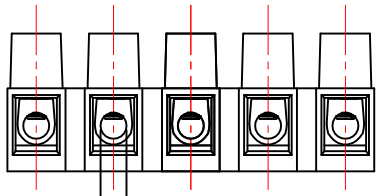


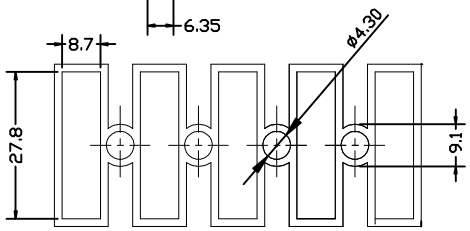


N=No.of contacts

## SPECIFICATION

**MATERIAL**

- Housing:PA66,UL94V-0
- Screw:M5.0 Steel ,Zinc Plated
- Terminal:Brass,Ni Plated

**ELECTRICAL**

- Rated voltage:450V
- Rated current: 57A
- Wire Range($MM^2$):2.5-16.0$MM^2$

**MECHANICAL**

- Strip Length:12mm
- Operating Temperature:-40°C~+105°C

## 订购方式/HOW TO ORDER

[ ] [ ][ ] P — [ ] [ ] — [ X | X | X ] 客户需求 Customer Request

- 型号 Series NO.
- 极数 NO.of Pole
- 间距 Pitch

| | |
|---|---|
| 1 | 单间距 Single Pitch |
| 2 | 双间距 Double Pitch |

- 颜色 Color

| | | |
|---|---|---|
| 1 | 灰色 | Grey |
| 2 | 蓝色 | Blue |
| 3 | 黑色 | Black |
| 4 | 绿色 | Green |
| 5 | 橙色 | Orange |
| 6 | 红色 | Red |
| 7 | 透明 | Transparent |
| 8 | 黄色 | Yellow |
| 9 | 白色 | White |


CONTACT WITH US:
TEL:+86-574-63505128 FAX:+86-574-63532183
E-Mail:sales@nbmax.com.cn Website:www.nbmax.com.cn


| 公差一览表 TOLERANCE UNLESS OTHERWISE | | | |
|---|---|---|---|
| X. | ±0.25 | X°. | ±5° |
| .X | ±0.20 | .X° | ±2° |
| .XX | ±0.15 | .XX° | ±1° |
| .XXX | ±0.02 | .XXX° | ±0.5° |
| 日期 DATE | 2012.07.10 | | |

宁波迈科思电子科技有限公司
NINGBO MKX ELECTRONIC TECHNOLOGY CO.,LTD

| | | | | | |
|---|---|---|---|---|---|
| 单位 UNITS | mm | 制图 DRAWING | 陈冬梅 | 产品名称 TITLE | MX16HWP-14.5 |
| 角法 VIEW | | 设计 DESIGN | 顾兴伟 | | |
| 比例 SCALE | 1:1 | 审核 CHKD | | 产品料号 PART NO. | MX16HWP-14.5 |
| 版本 VER | A0 | 核准 APPD | | 图号 DRAW NO. | MX16HWP-14.5-A0 |